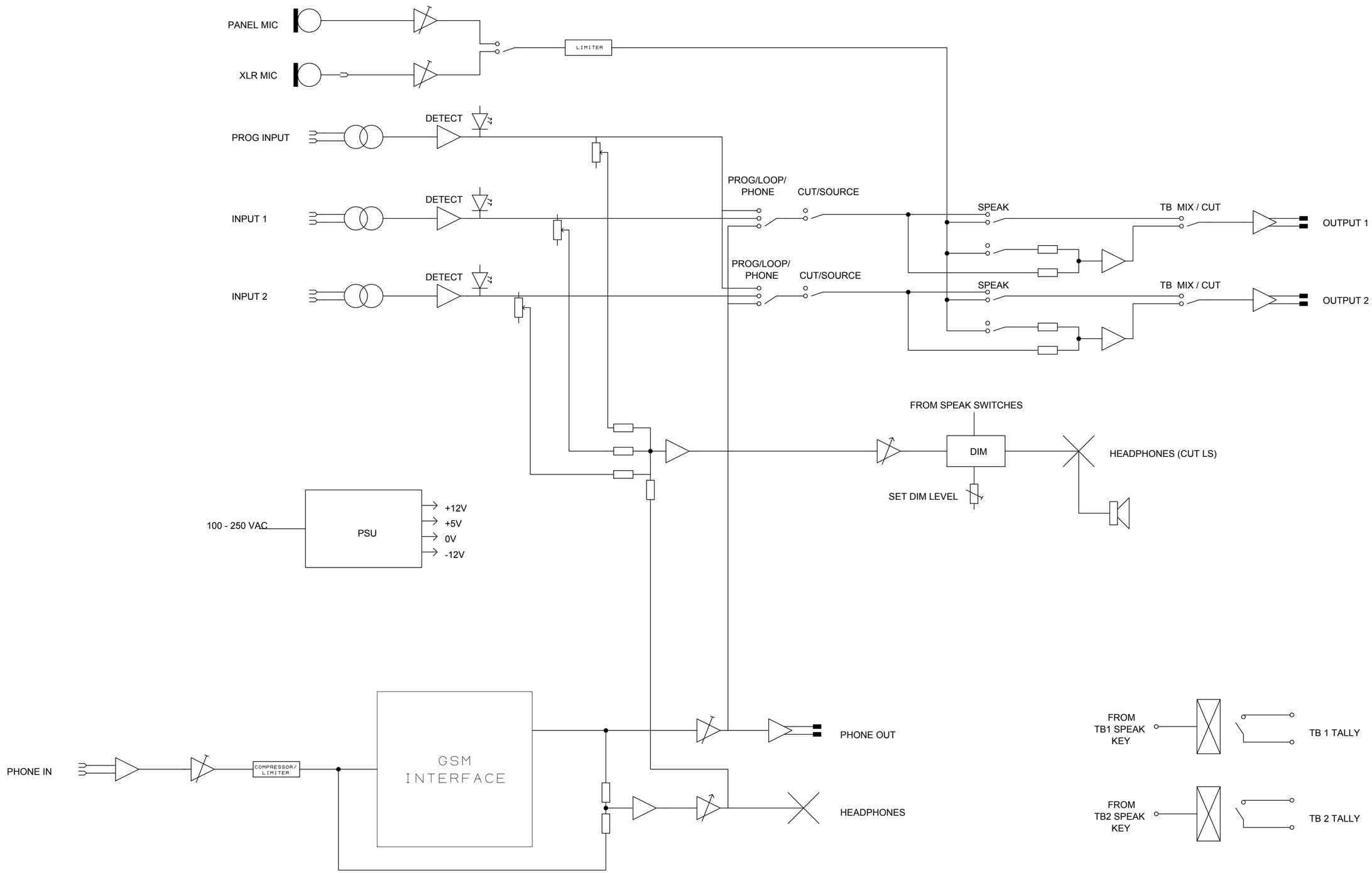

Twin 4 wire with single mobile phone	ISSUE 3	DATE 10/02/10	GLENSOUND ELECTRONICS LTD
	DRAWING NUMBER A2-16580		

© 2009